25th anniversary giveaway

To celebrate 25 years of *Woodturning* magazine, a string of the industry's top names are giving away items from their product ranges. This month, we have six revolving live centre and cone centre sets from **Robust Woodturning Tools** to give away

PHOTOGRAPH COURTESY OF ROBUST TOOLS

Robust live centre

This live centre from Robust lives up to its name with a precision 40° angular contact ball bearing, sealed and lubricated for life, carrying both the thrust load and rear radial load combined with a precision radial bearing in the nose, both guaranteed by the manufacturer for five years. The two bearing setup delivers lasting service and accuracy.

The reversible and extendable 9.5mm (⅜in) tip with a 60° point on one end and a flat face on the other is retained in the through drilled bore by means of an Allen (hex) screw, thus the tool can be used as a 60° centre, a ring centre (with or without centre point) or the flat face can be used to support faceplate work with minimal marking. The through bore enables drilling and the Morse taper is threaded ⅜in 16tpi for a drawbar while the nose is threaded ¾in 10tpi to enable additional accessories such as the optional 60° aluminium tip or reversible 100mm cone centre to be fitted.

In use, the centre runs quietly and unobtrusively and the relatively narrow point gives excellent access to the end of spindle work. Changing over the configuration of the tip or fitting accessories is uncomplicated. Given the robustness and versatility of this centre and the facility to add further optional or shop-made accessories to the threaded nose, this is likely to be the only live centre you will ever need.

Cone Set

Aluminium tip and reversible 4in bullnose set. Fits other manufacturer's centres with ¾in-10 threads.

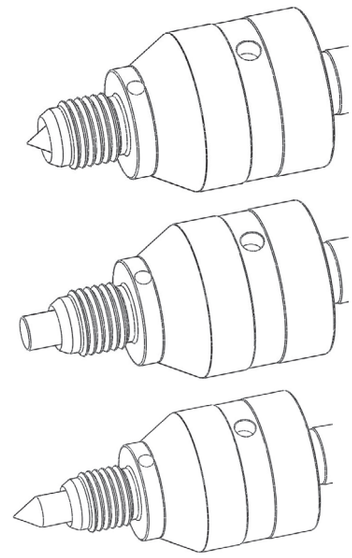

FURTHER INFORMATION

For more information and to see other products from Robust Tools, visit www.turnrobust.com.

How to enter

Send your details on a postcard with the title '25th anniversary giveaway 291' to ***Woodturning* Reader Giveaway**, 86 High Street, Lewes, East Sussex BN7 1XN or send an email to karensc@thegmcgroup.com.

The closing date for this giveaway is 2 June, 2016.

Giveaway rules

The giveaway is open to readers worldwide. Only completed entries received by the closing date will be eligible. No entries received after that date will be considered. No cash alternatives will be offered.

The Editor's decision is final and no correspondence can be entered into. The winner will be expected to be in possession of a copy of this issue of *Woodturning* magazine.

One entry per household. Employees of GMC Publications, their associated companies and families are not eligible to enter. By entering the giveaway, winners agree to their names being used in future marketing by GMC Publications, unless you mark your entry otherwise.

WT_291_12_GIVEAWAY_bdMBvsSD.indd 12 02/03/2016 09:18